SHEET OF

NOTES:
1. ALL DIMENSION IN MM [INCH]
2. GENERAL TOLERANCE: X.X=±0.4
   X.XX=±0.25
3. TERM. NOS. FOR REF. ONLY
4. CONTACT RATING SWITCHING: 150mA, 250V AC/DC
   350mA, 110V AC/DC
5. OPERATING FORCE: 425±100 CM/STANDARD
6. OPERATING TEMP: −30° to 85°C
7. ▲ CIRCUIT SP: 4 POSITIONS, 30° INDEX.
8. ▲ DESIGNATE MAJOR DIMENSIONS
9. LOCK NUT AND WASHER NOT SHOWN.

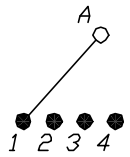

CONTACT CONFIGURATION
(BBM)

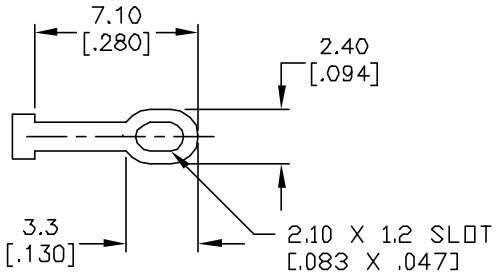

TERMINATION DETAIL
SCALE 2X

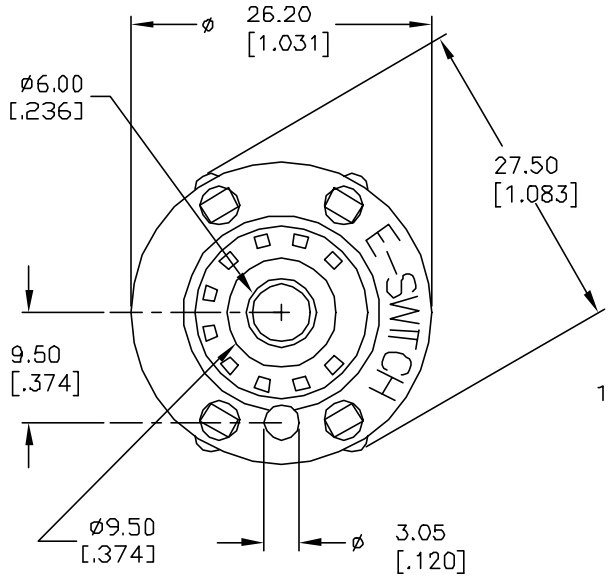

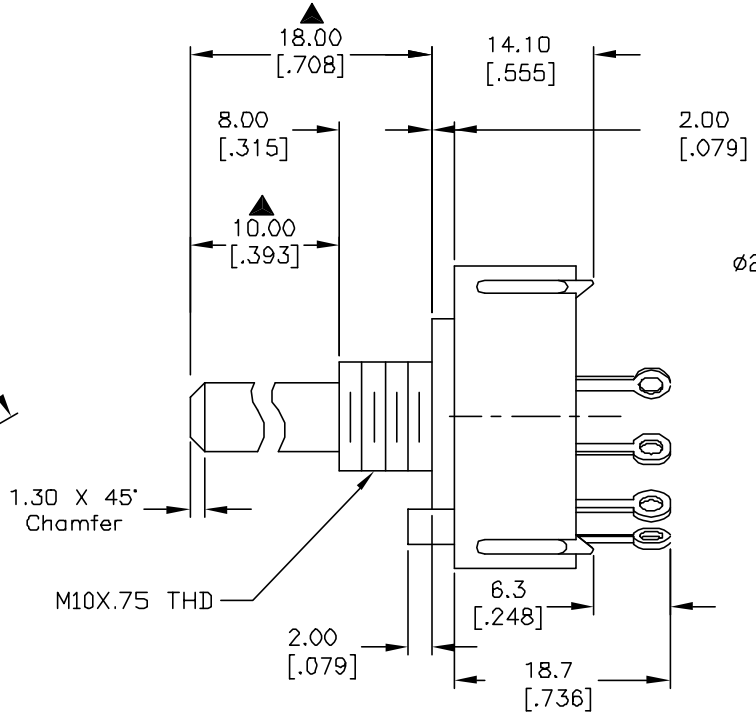

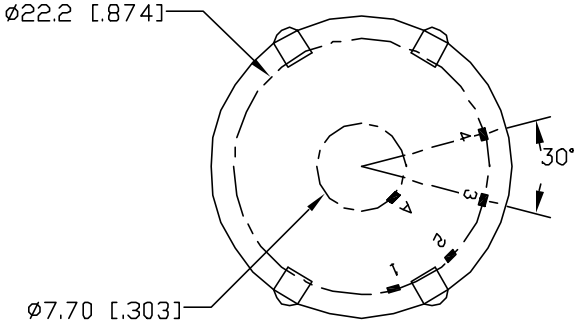

REV.	ECN No.	DESCRIPTION	DATE	CHKD
A	11272	RELEASED FOR PRODUCTION	3/01/01	CJB

THE INFORMATION CONTAINED IN THIS DOCUMENT IS PROPRIETARY TO E-SWITCH AND IS NOT TO BE COPIED OR TRANSFERRED

E-SWITCH®

TITLE: KC-14-B-02-N-L-S (B=18mm)

SCALE	DATE	DR	DWG	REV
1.5:1	3/01/01	CJB	G510720	A